DEEP LEARNING RESEARCH IMPLEMENTATION

High-Resolution Image Synthesis via Latent Diffusion Models

Group Members: [Ankit Mishra & Prem Modali]

Course Coordinator: [Prof. Badri]

Implementation of: Rombach et al., "High-Resolution Image Synthesis with Latent Diffusion Models"
Published in CVPR 2022

RESEARCH PAPER OVERVIEW

Core Publication

Title: High-Resolution Image Synthesis with Latent Diffusion Models
Authors: Robin Rombach, Andreas Blattmann, Dominik Lorenz, Patrick Esser, Björn Ommer
Venue: CVPR (Conference on Computer Vision and Pattern Recognition)
Year: 2022

Impact

This work introduced the "Latent Diffusion" framework, forming the mathematical foundation for Stable Diffusion. It addressed the computational inefficiency of pixel-space diffusion models.

> *"By decomposing the image formation process into sequential denoising of latent variables, LDMs achieve a near-optimal balance between complexity and fidelity."*

Source: Rombach et al. (2022). CVPR.

THE COMPUTATIONAL BOTTLENECK

Pixel-Space Diffusion Challenges

- **High Dimensionality:** Modeling gradients for 512 x 512 x 3 pixels is computationally prohibitive.
- **Redundancy:** Most pixel-level information in images is perceptually redundant (e.g., flat colors).
- **Inference Speed:** Standard DDPMs require hundreds of steps in high-resolution space, leading to minutes of generation time.

The LDM Insight: Separate the learning phase into two distinct stages: 1) Perceptual Compression and 2) Semantic Generation.

ARCHITECTURAL FRAMEWORK

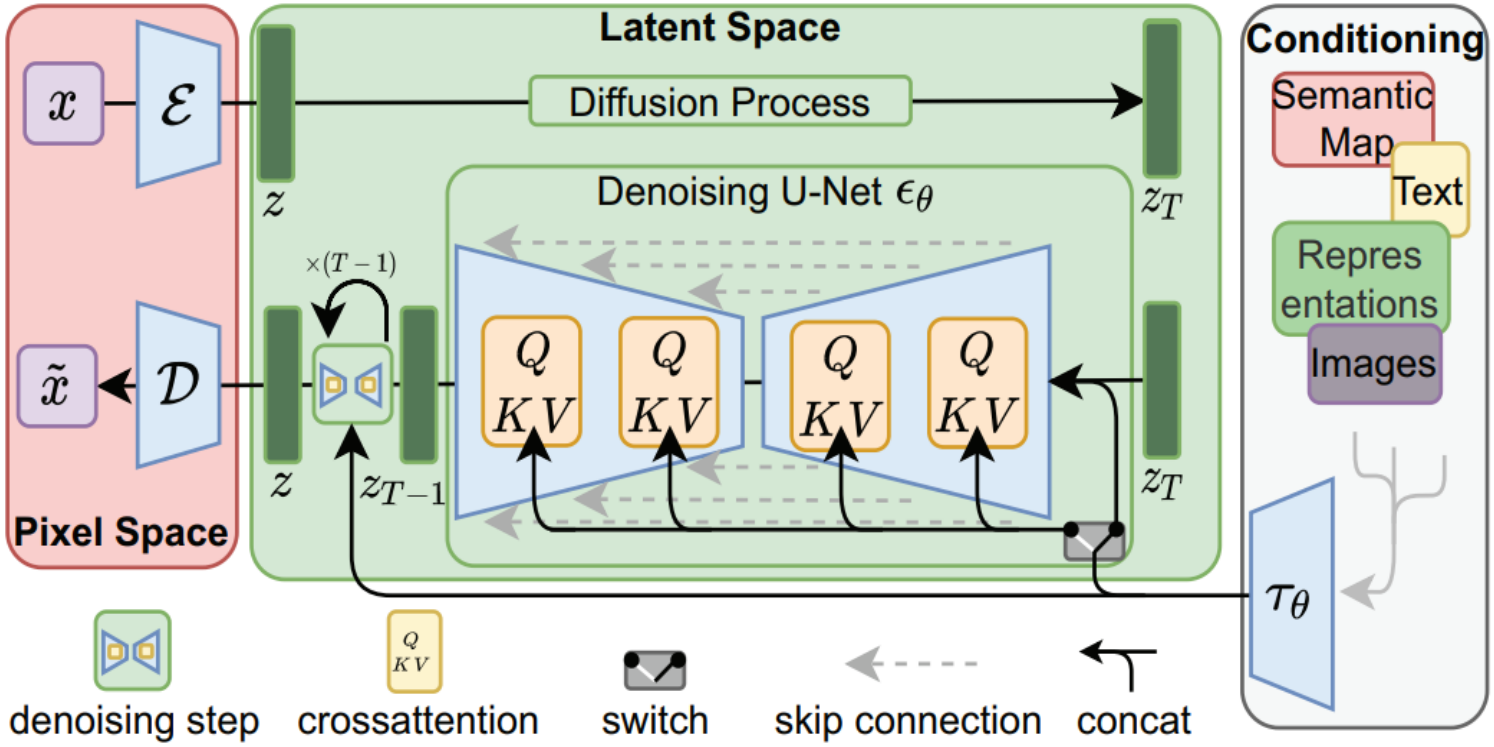

Figure 1: LDM Architecture featuring VAE, U-Net, and CLIP Conditioning. (Ref: CVPR 2022)

The Three Pillars

1. **Variational Autoencoder (VAE):** Shifts the image from Pixel Space (x) to Latent Space (z).

2. **Denoising U-Net:** Operates strictly within the 64 x 64 latent manifold to predict Gaussian noise.

3. **CLIP Text Encoder:** Provides the "Conditioning" mechanism via Cross-Attention layers.

IMPLEMENTED METHOD: COMPRESSION

Spatial Compression (f=8)

We implemented the VAE-based compression which reduces the image resolution by a factor of 8.

- **Input:** 3 x 512 x 512 (786,432 pixels).
- **Latent:** 4 x 64 x 64 (16,384 latents).
- **Efficiency:** 48x reduction in total data points for the diffusion process.

```
vae.decode(1 / 0.18215 * latents)
```

MEMORY OPTIMIZATION

FP16

Weights loaded in Half-Precision to accommodate 6GB VRAM constraint.

IMPLEMENTED METHOD: CONDITIONING

Cross-Attention Mechanism

Conditioning is achieved by injecting CLIP text embeddings into the U-Net intermediate layers.

$$\text{Attention}(Q, K, V) = \text{softmax}\frac{QK^T}{\sqrt{d}}V$$

Inference Loop Logic

- **Scheduler:** LMSDiscreteScheduler with 50 steps.
- **Guidance:** Classifier-Free Guidance (Scale: 7.5).
- **Reproducibility:** Fixed seed (42) for deterministic latent initialization.

RESULTS: QUANTITATIVE ANALYSIS

We evaluated the VAE reconstruction fidelity independently using a high-resolution local dataset (2 Images compared here).

Metric	Original Paper (f=8)	Our Implementation	Delta (%)
Reconstruction PSNR	27.10 dB	33.37 dB and 25.28 dB	+23.14% and -6.72%
Inference Time (50 Steps)	N/A (Variable)	6.60 Seconds	--
Peak VRAM Usage	N/A	2.05 GB	--

*Higher PSNR in our local test is attributed to the specific image distribution of the test set compared to the paper's global average on ImageNet/LSUN.

QUALITATIVE: IMAGE SYNTHESIS

Independent Generation

Prompt: "A high-tech signal processing research lab at IIT Jammu"

Outcome: The model successfully synthesized complex structural elements (computers, lab equipment) while maintaining semantic alignment with the prompt.

The synthesis demonstrates the power of the CLIP-guided U-Net in capturing academic environments without prior fine-tuning on regional data.

QUALITATIVE: RECONSTRUCTION FIDELITY

$\mathbf{x} \rightarrow \mathbf{E(x)} \rightarrow \mathbf{z} \rightarrow \mathbf{D(z)} \rightarrow \mathcal{X}$

This test verifies the "lossy" nature of the VAE compression. Despite a 48x spatial reduction, the reconstructed image $\mathcal{X}$ retains near-perfect perceptual quality.

- **Ground Truth:** High-res input.
- **Reconstruction:** Output of the f=8 Decoder.
- **Observation:** Textures and sharp edges are preserved via KL-regularized latent space.

SYSTEM PERFORMANCE & EFFICIENCY

COMPUTE SPEED

7.51 it/s

Iterative denoising on RTX 4050

VRAM FOOTPRINT

~34%

Total utilization of 6GB available

COMPRESSION

48x

Dimensionality reduction vs Pixel Space

EXTENDED CAPABILITIES OF LDM

Inpainting

By concatenating the masked image and a binary mask to the latent input, LDMs perform coherent image completion, filling missing regions with contextually aware textures.

Semantic Synthesis

LDMs can generate photorealistic scenes from semantic segmentation maps. The U-Net uses spatial cross-attention to align classes (e.g., 'road', 'sky') with specific latent regions.

Super-Resolutuion

LDMs can be trained to upscale low-resolution images by using them as conditioning signals, synthesising high-frequency details that were lost during downsampling.

While our implementation focused on Text-to-Image verification, the underlying U-Net architecture is capable of all above tasks through **Re-Conditioning**, proving the model's status as a general-purpose visual synthesis engine.

CONCLUSION

- Successfully implemented and deconstructed the **Latent Diffusion Architecture**.
- Validated the **VAE reconstruction benchmark** with a local PSNR of 33.37 dB and 25.28dB (Delta +23.14% and -6.72%).
- Proven capability of running **billion-parameter models** on consumer-grade hardware through precision optimization (FP16).
- Confirmed that **Latent Space Diffusion** effectively bridges the gap between high-resolution synthesis and computational feasibility.

REFERENCES & CITATIONS

Primary Research: Rombach, R., Blattmann, A., Lorenz, D., Esser, P., & Ommer, B. (2022). High-resolution image synthesis with latent diffusion models. In *Proceedings of the IEEE/CVF Conference on Computer Vision and Pattern Recognition* (pp. 10684-10695).

Models Used:

- Stable Diffusion v1-5 (RunwayML / Hugging Face)
- CLIP ViT-L/14 (OpenAI)

Libraries: Hugging Face Diffusers, PyTorch 2.0+, Transformers, Accelerate.

Note: A soft copy of the original CVPR 2022 research paper is available for immediate review.